UPGRADE
YOUR
EFFICIENCY

High-efficiency application of new P Series tablet presses in the pharmaceutical industry
菲特新P系列压片机在制药行业的高效应用

Rui Geng (Head of PM / R&D, FCN)
Fette Compacting China, July 2019

FETTE
COMPACTING

Agenda
议程

- Fette Compacting Overview 菲特公司简介

- Fette Compacting Product Portfolio 菲特公司产品组合简介

- High-efficiency application of Fette Compacting New P Series 新P系列压片机在制药行业的高效应用

Fette Compacting – the Global Market Leader
菲特压片——全球压片机行业领导者

- Founded 1908 by tool-maker Wilhelm Fette 成立于1908年
- HQ located in Schwarzenbek, Germany总部位于德国汉堡附近的施瓦岑贝克
- Production facilities: Schwarzenbek Germany, Nanjing China 工厂：施瓦岑贝克，南京
- 800 employees worldwide (thereof 70 R&D and engineering)

  全球800位员工（近70位研发人员及工程师）
- 12 subsidiaries 12个分公司
- 5 Competence Centers 5个能力中心
- more than 100 technicians worldwide 全球100多位售后

70 Years of success since 1948 70年成功经验

Installed Base > 5,000 machines globally 全球5000多装机量

Production > 260 machines p.a. worldwide 每年新生产260多台新机器

FETTE COMPACTING

Global Setup
全球组织结构

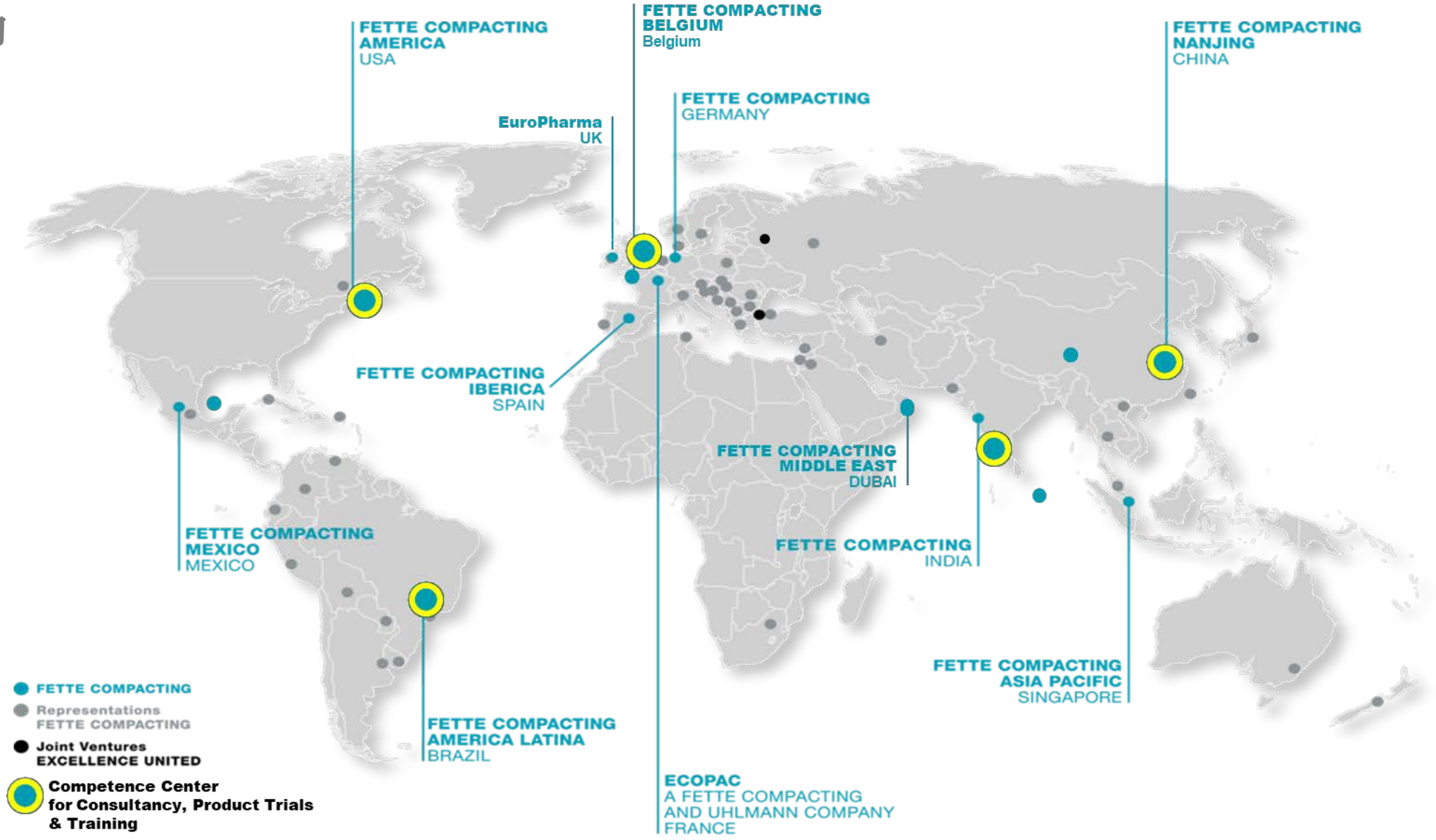

FETTE COMPACTING

Technology Highlights - Innovation by Fette Compacting
菲特压片技术里程碑

- 1948 First Fette tablet press 第一台菲特压片机问世
- 1982 Digitalization: Fette presents PT2080, the world's first computer-controlled tablet press

  数字化：菲特推出PT2080，是世界上第一台电脑控制的压片机
- 1991 Global success: Fette Compacting's PT3090 is the world's first tablet press with quick-change turret

  在全球范围取得成功：菲特PT3090是世界上第一台快速更换转台的压片机
- 2001 i-generation (1200i, 2090i, 3090i) 推出功能强大的i系列产品：1200i, 2090i, 3090i
- 2011 FE55, world premiere of the first machine of the new generation

  FE 55，新一代世界级高端压片机亮相，具备革命性的创新技术
- 2012 FE35, world premiere of the fastest machine in the product change

  FE 35，世界级高端压片机中切换生产品种速度最快的压片机亮相
- 2013 Remote Services for tablet press 推出压片机远程联机客户服务
- 2014 FE75, 3rd model in the innovative FE Series, which offers top performance for large batch production

  FE 75，作为FE系列第三款创新产品，是目前世界上产量最大的压片机（160万/小时）
- 2018，P Series Facelift is launched 新P系列上市

FETTE COMPACTING

Company Profile of Fette Compacting China
菲特（中国）制药科技有限公司

- Fette Compacting (China) Co., Ltd. is 100% invested by Fette Compacting GmbH. Total investment is over 18 Mio. USD. The China **production started in August 2004 ➔** Move into the new **state-of-the-art Plant in 2018**

  菲特中国是德国菲特在中国独资子公司，总投资超过1,800万美元。工厂于2004年8月开始投产，并于2018年迁至新工厂。

- Nanjing is one of **Fette Compacting's global factories**, following the stringent German Fette Compacting quality standard.

  南京工厂是菲特在全球的工厂之一，严格遵循菲特德国的质量标准建造与运行，确保德国品质。

- All P-Series(P1010/P2020/P3030) produced in Fette Compacting China passed the **"CE" certification**, to ensure that the products meet the requirements of EU regulations and standards from all aspects.
  菲特中国生产的P系列（P1010/P2020/P3030）高速旋转式压片机都通过了CE认证，确保产品从整体到细节符合欧盟法规及标准的要求。

FCN – new Plant: Office Building

FETTE COMPACTING

Holistic offerings by Fette Compacting China
菲特中国提供的整体解决方案

The entire process chain from one single source (China & Export)
提供整个流程链上的所有服务

EFFICIENCY GUIDE

TECHNOLOGY stands for everything, we offer in tableting technology from tablet presses through process equipment to tableting tools.
代表为片剂生产提供的所有机器、辅机和模具。

SERVICE includes all the services related to machines and equipment, such as the supply of spare parts, equipment modernization, and the technical field service.
包含所有机器、设备相关的服务。

COMPETENCE is the overarching idea behind all our process-related services. This includes training offers, product trials, application and OEE consultation, and engineering.
代表整个流程链上可以提供的专业服务。

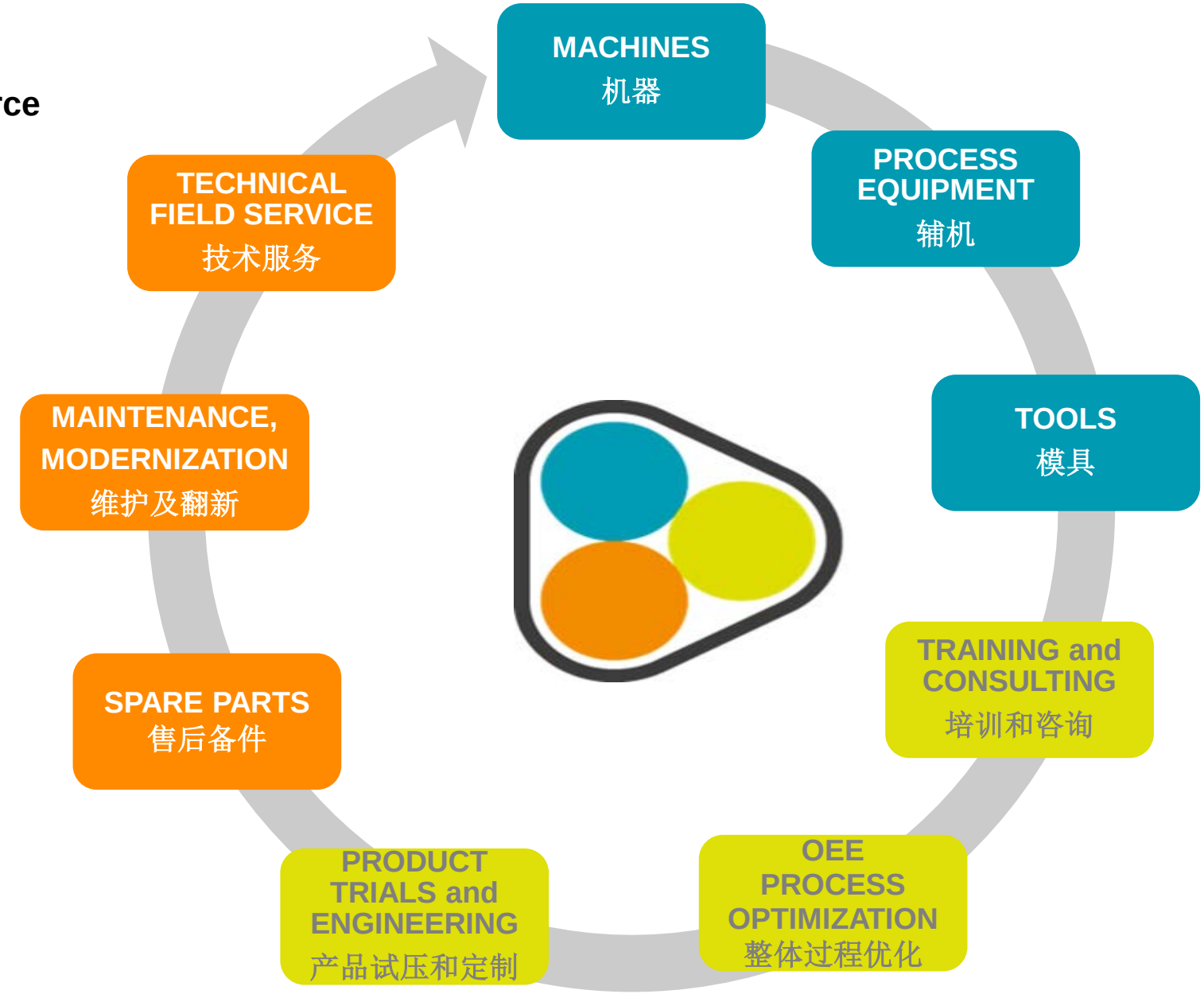

Agenda
议程

- Fette Compacting Overview 菲特公司简介
- Fette Compacting Product Portfolio 菲特公司产品组合简介
- High-efficiency application of Fette Compacting New P Series 新P系列压片机在制药行业的高效应用

TABLET PRESSES
压片机

The FE series
High production potential and compact
FE系列——高效且紧凑的创新标杆

International leader 全球领先 – because efficiency counts 全新高效理念

- **TRI.EASY** design – simplicity as the key to efficiency and maximum performance
  TRI.EASY设计——简便是高效的关键

- 360° access – maximum accessibility through innovative housing design
  360度访问——创新的排片通道设计，用户拆装机器更方便

- Easy, reliable operation with maximum output
  简便、可靠的操作

- Minimum product changeover times
  最短的产品切换时间

FETTE COMPACTING

TABLET PRESSES
压片机

The i series
Flexible and productive
i系列——灵活且高产

Versatile – 多样性
for high output 更高产量

- Single and double rotary presses
  单出料和双出料压片机
- Single and 2-layer tablets
  可压单层片或双层片
- High degree of productivity with exchangeable die turrets or segment turrets
  可更换整体转台或分段转台，提高压片机生产效率
- Great flexibility (WIP, Heat Sensitive, pellets) and outstanding price/performance ratio
  极大地灵活性（水洗机、热敏感性的产品、微丸压片）

FETTE COMPACTING

TABLET PRESSES
压片机

The new P series

Efficient and productive

新P系列——高效且极具生产力

Efficiency and Quality效率与质量
Perfectly combined完美结合

- Cost-oriented solution with high output
  极具性价比的解决方案
- Single and double rotary presses
  单出料和双出料压片机
- Single and 2-layer tablet production
  可压单层片或双层片
- Increased productivity with exchangeable die turrets可更换整体转台，提高压片机生产效率
- Key Components imported from Germany
  核心部件德国原装进口

FETTE COMPACTING

Fette Tooling
菲特模具

- Beside ISO and TSM standards, Fette designs and produces own standard tooling like EU1”-441, FS19.
  除了国际标准和美国标准之外，菲特设计、制造了自己标准的模具，比如EU1”-441、FS19。

- Advantage of Fette tooling: longer dwell time, less vibration.
  菲特模具的优势：更长的保压时间，更少的振动。

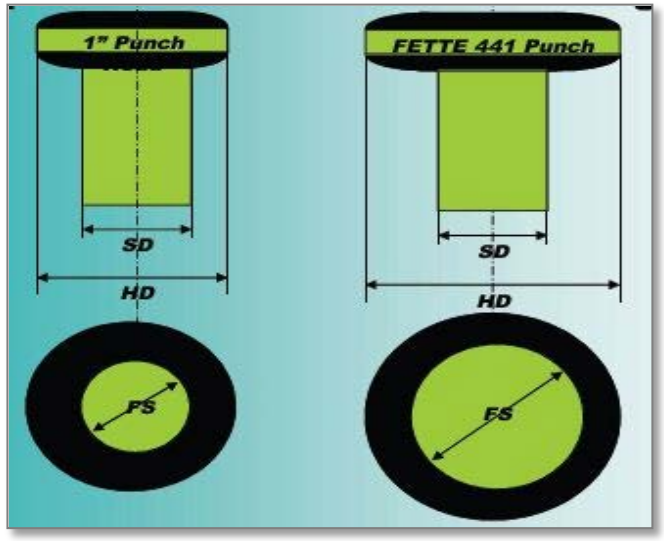

更大的冲头直径

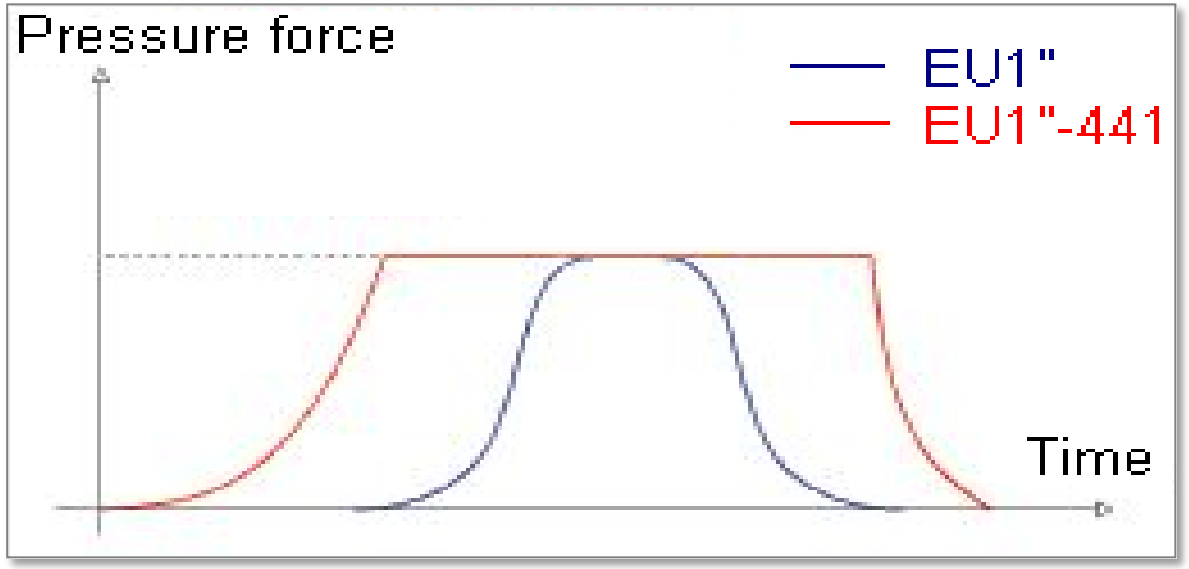

更长的保压时间，更好的片剂质量

Process Equipment 过程设备

Deduster & metal check 筛片金检机
➔ Economic P version available

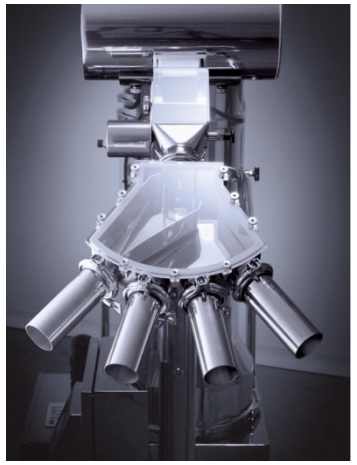

D4 Diverter 分配器
➔ Distribute tablets into 4 drums

Weightmaster 在线称重仪
➔ economic P version available

Checkmaster
4参数在线检测仪

PKB unit
硬脂酸镁雾化系统

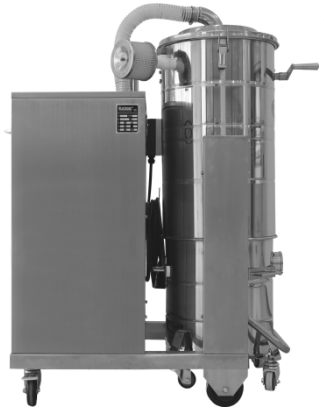

High performance vacuum system (SS 304)
高效吸尘器（不锈钢304）

Handling System
更换转台系统

Service carts
更换转台小车

FETTE COMPACTING

Agenda
议程

- Fette Compacting Overview 菲特公司简介

- Fette Compacting Product Portfolio 菲特公司产品组合简介

- High-efficiency application of Fette Compacting New P Series 新P系列压片机在制药行业的高效应用

Product Principles for P-Series
P系列压片机产品方针

- P series is an important integral part of the global Fette Compacting machine portfolio. P系列是菲特全球产品线中重要的组成部分。

- Core components are imported parts from Germany, which is also part of our IP strategy (= core competencies). Those are mainly:所有核心部件（核心竞争力）均德国进口，这也是我们知识产权战略的一部分。部分进口零部件列表:
  - Turret 转台
  - Compression roller 压轮
  - Main shaft 主轴
  - Servo motors 伺服电机
  - VME system, controls & electronics 工业计算机&电气控制
  - Press sensors 压力传感器

- The design and process standards of in-house productions are on the same level as in Fette Compacting Germany. State-of-the-art DMG CNC Machining centers and 3D – Measurement System ensure tight tolerances in a µm range.

  与德国相同的设计与制造标准，最新款德国德玛吉数控机床和进口三坐标检测仪确保零件误差级别在微米以下。

- 100% measurement of all functional parts with high precision 3 D-Measurement Center (Leitz) in-house

  工厂使用高精度三坐标测量仪100%检测所有功能零部件。

- With continuous experience exchange, Service engineers, R&D engineers and production specialists are trained in Fette Compacting GER. 通过不断的经验交流，服务工程师，研发工程师和生产专家接受了在菲特德国的培训。

The turret – the heart of tableting
转台–压片机的心脏

- The turret plays a truly supporting role as almost all of the essential components are installed at it. The output of a tablet press significantly depends on how many drill holes can be accommodated on the die which is in turn part of the turret.

  转台之所以被称压片机的心脏，是因为它起了一个非常重要的支撑作用，几乎所有的重要部件都是安装在它上的。

- 100% imported from Germany, with excellent manufacturing accuracy. Chinese machines and models are assembled in China factory according to high class German quality standard. Ensure the tablet quality.

  因为所有重要部件几乎都安装在转台上，所以对转台的精度要求非常非常高。菲特转台100%原装德国进口，拥有极高的制造精度；中国工厂严格按照德国工艺进行组装，装配精度也非常的高。从而保证最终产品——药片的重量偏差极小。

FETTE COMPACTING

Pressure station structure
压力站结构

- High compression force design, makes the machine very robust to compress tablets at high speed and manage the pressure.

  抗强压的结构设计，确保机器能在高速运转时承受很大的压力，并且不会产生变形。

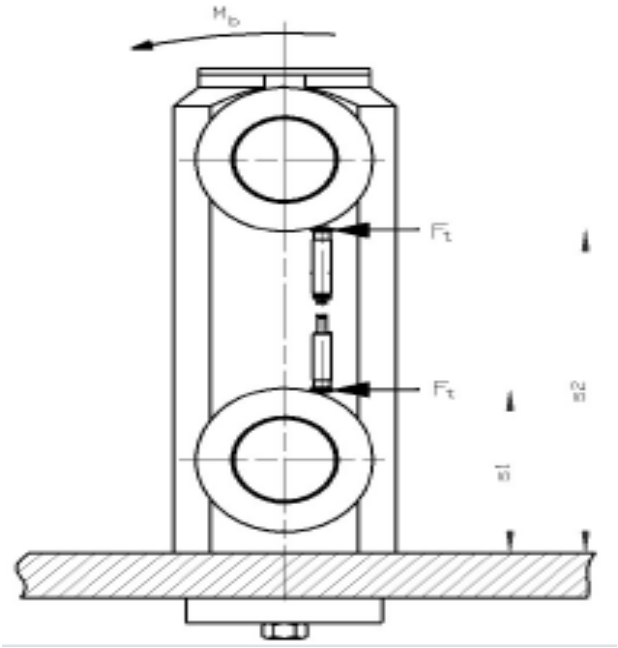

高速压片时，冲头快速移动产生的剪切力Ft会给压轮基座产生一个弯曲力Mb

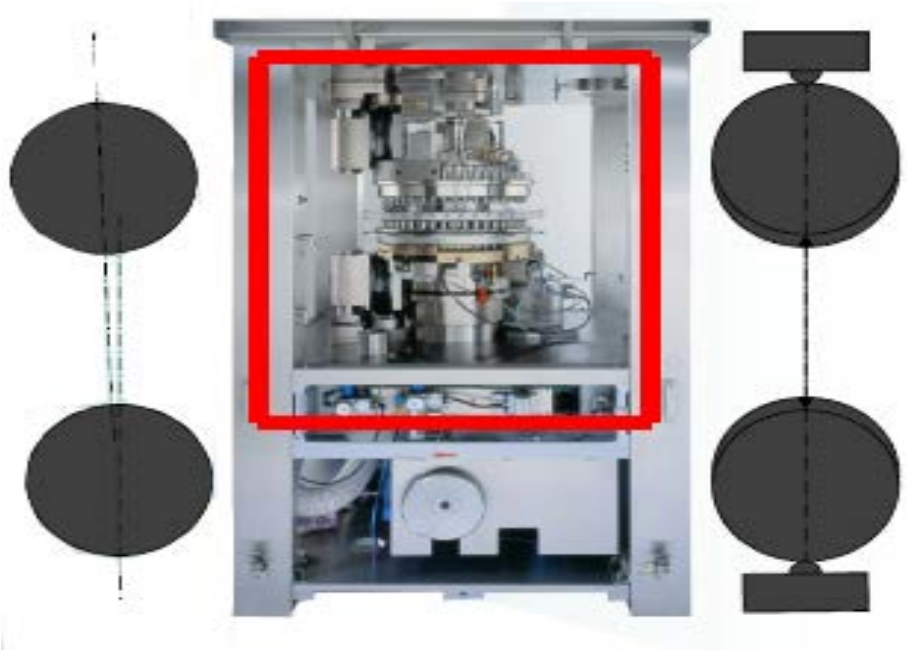

长此以往容易造成上下压轮不对齐，缩短压片的保压时间。菲特独特的抗强压设计，能确保压轮始终对齐，保证所需的保压时间。

FETTE COMPACTING

Electronic & Software Control

电器 & 软件控制

- P2020 is the first computer controlled tablet press in China. The own Fette Compacting Control software is verified by most multinational pharmaceutical companies. **P2020是中国第一台工业计算机控制的压片机。P系列采用菲特自主研发专业的控制软件，功能性及稳定性已在全球多家跨国公司得到验证。**

- Equipped with VME-BUS technology and imported precision sensors; can deal with high-speed and real-time data processing, to meet the needs of customers' processes. **采用VME-BUS技术，配备多个进口精密传感器，高速实时数据处理（3600次脉冲/周测量频率，保证对每个冲头可进行多点测量，测量值更准确），可存储编程，能满足客户各种需求。**

- Professional PILZ safety PLC, ensuring immediate emergency stop even when the machine is running at high speed. Minimizing the risk to harm people or damage tools. **专业PILZ安全PLC系统，确保机器高速运转时发生意外亦可快速停机，避免操作人员或模具的损伤。**

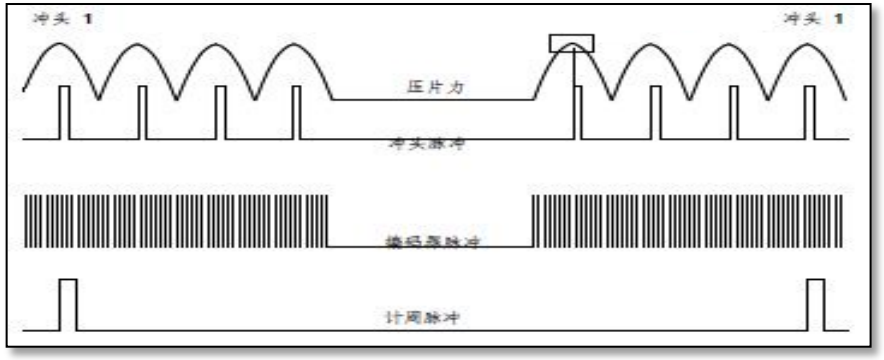

FETTE COMPACTING

P series Facelift – What's new?
新P系列压片机 – 新特征

- **New** pure **design & functionality** , incl. new stainless steel terminal
  全新的外观与功能设计，包括新的不锈钢操作台
- **Enhanced basic machine**
  升级的基础机
- **Optimized dust collection system**
  优化的吸尘系统
- **Smart:** Easy **Integration of process equipment** (deduster, weightmaster)
  智能集成的辅机系统
- **Additional options, report & data management** available
  更多的选项，额外的报表及数据管理变的可能

New P2020

New Design
新设计

- Together with the whole Fette Compacting tablet press product portfolio
  与菲特公司所有压片机产品组合陈列在一起

Old P3030

3200i

FE75

NEW P3030

Enhanced basic machine: Upgrade all powder contact parts default 316L
升级的基础机：物料接触不锈钢升级成316L

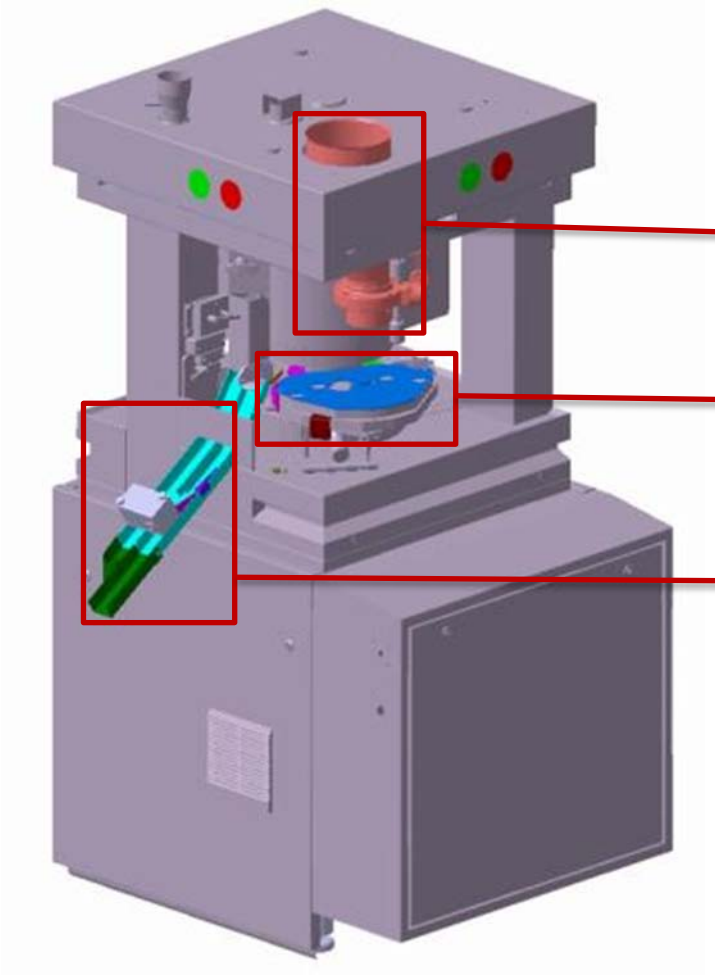

Feeding Hopper
料斗

F-O-M related parts
F-O-M填料器相关零件

Parts related to tablet discharging
出料槽相关零件

Enhanced basic machine: Upgrade lubrication
升级的基础机：标配更先进的润滑系统

- **Dual Circuit Lubrication,** is included in the updated basic machine
  双路润滑系统，从选项升级为标配

- **Upper Punch Lubrication (external shaft) ,** is included in the updated basic machine
  上冲外部冲杆润滑，选项升级为标配

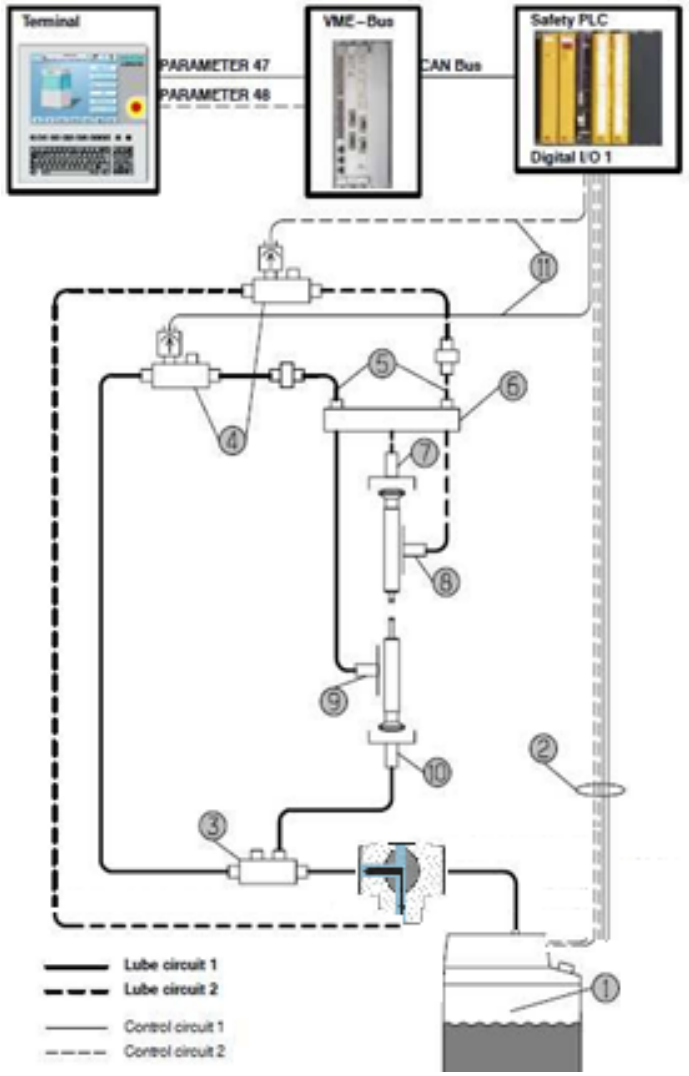

Optimized dust collection system
优化的吸尘系统

- **Optimized dust collection system** for broader applications and performance.
  优化的吸尘系统，应用范围更广，吸尘效果更好

Exclusive Economic process equipment solutions
专供的高品质高性价比辅机

- **Deduster** 筛片机

  PT Econoflex 400 P (standalone) 独立式筛片机

  Econoflex 400 CE P (combi-unit) 筛片金检一体机

- **Weightmaster** 在线称重仪

  Weightmaster 6.2 P 经济型在线称重仪

- **Vacuum-system** in Stainless steel (GMP) 不锈钢吸尘器

  G-Winner G400-FT (for P2020/P1010) **G400-FT**配单出料压片机

  G500-FT (for P3030) **G500-FT**配双出料压片机

+ Smart: Possible Integration of process equipment
可智能集成专供辅机

Econoflex 400 CE P

Weightmaster 6.2 P

GT500-FT

Integration of deduster
筛片机的集成

➢ **New Deduster PT Econoflex 400 P**

新PT筛片机 Econoflex 400 P

特征	用户收益
+专利的吸尘概念	+高效除尘
+分段式FDA认证的高分子聚合物螺旋导轨	+符合GMP，方便清洁
+可集成金属检测仪	+扩展性高
+高分子聚合物有效降低噪音	+低噪音
	+高效、可靠

➢ **Integration**

集成控制

Start press 启动压片机 → Start deduster automatically 筛片机自动启动

Stop deduster 停止压片机 → Stop deuster automatically 筛片机延时停止

Integration of metal detector
金检仪的集成

- **Selected CEIA high sensitivity metal detector THS/PH21E**

  精选的CEIA高精度金检仪THS/PH21E

特征	用户收益
+316L不锈钢结构	+符合GMP，方便清洁
+250个产品配方，1000条存储记录	+满足用户对于数据报告的需求
+可集成金属检测仪	+扩展性高
+具备可编程能力	+满足客户个性化应用

- **Integration**

  集成控制

  Once the bad tablets number is more than setting value, the tablet press will stop

  当检测废品数量超过 设定值，停止压片机

Integration of at-line weightmaster
在线称重仪weightmaster的集成

- **New weightmaster 6.2 P**

  新的在线称重仪6.2 P

特征	用户收益
+全自动测量片重	+无需手工称重
+称重结果可集成到批次报告	+数据更加精确
+片重结果超过限值达到设定数量后可停止压片机	+通过调节限值精确控制片重
+易于清洁	+符合GMP

- **Integration**

  集成控制

Test result can be transferred to the tablet press 检测结果可传输到压片机

Once the limitation of measure result is reached, the tablet press will stop

当检测片重超过设定范围的数量达到设定值，压片机会停机

Integration of MES system
MES系统的集成

- **New release option OPC_OCIF support the customer's MES system**
  新释放的OPC_OCIF选项支持连接客户的制造执行系统

- **Integration**
  集成控制

The MES system can get the running data of the tablet press MES系统可以获取压片机的运行数据

Additional report & data management becomes available 个性化的数据报告&数据管理变得可行